Spare Parts Catalog

3 WG 171

Material number: 4656.073.037

Current date: 11.12.2014

ZF Friedrichshafen AG
Hauptverwaltung
80038 Friedrichshafen
Deutschland
Telefon: +49 7541 77-0
Telefax: +49 7541 77-908000
www.zf.com

zuständiges Werk:
Passau

© All rights reserved by ZF Friedrichshafen AG, even in the event of applications for copyright. We hold all rights of disposal, such as the right to copy and disseminate. All rights reserved.
For information only, not subject to the amendment service.

Notes relating to the spare parts catalog

Setup of the spare parts catalog

- Cover sheet
- Tecnical Cover (only in SDM print)
- Overview of figures
- Figure
- Associated parts list
- Next figure
- Associated parts list
- ...

Overview of figures

Bildtafel Figure	Sachnummer Product number	Benennung (Description)	Technische Info Technical info	Description (Benennung)	Menge Quantity	Einheit Unit
068.08.17	1316.170.001	AUSLEGER	WL	SHIFT TURRET	1	Stk
068.08.06	1316.170.031	DECKEL	WL*H-H *VM	COVER	1	Stk
068.08.14	1316.170.808	DECKEL	WL*AUSL+GEH*H-H*HF160N	COVER	1	Stk
08	1316.170.441	ANSCHLUSSTEILE	WL*NG-VORB*RG-SCHL*168N *BAJONETT	CONNECTING PARTS	1	Stk

The "gap" indicates that there is no separate graphics panel (poster) for this assembly
The parts of this assembly are shown with the same mid-section number on the figure

Figure and parts list

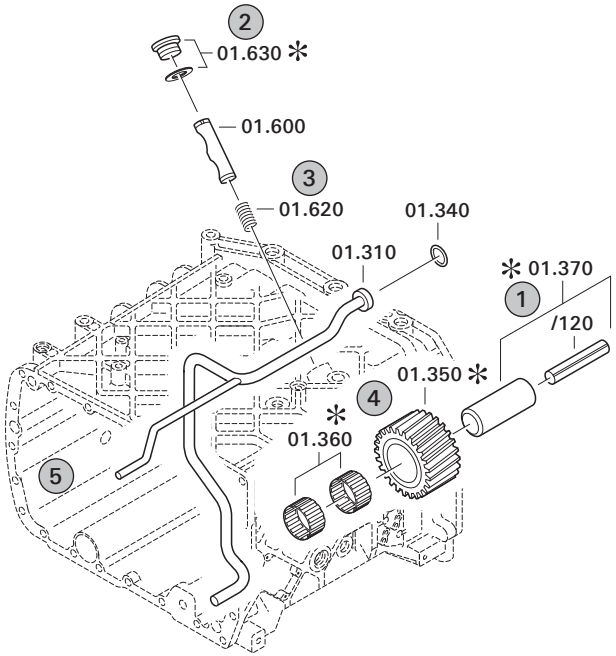

1 Positions and subpositions

Pos.	Sachnummer Product number	Benennung (Description)	Technische Info Technical info	Description (Benennung)	Menge Quantity	Einheit Unit
0370	1315.201.054	RUECKLAUFBOLZEN	KPL.16S151*SG*L= 79	REV.IDLER SHAFT	1	Stk
/0120	0631.329.293	SPANNSTIFT		SLOT. PIN	1	Stk

Positions marked with "/" are the individual items of a completion
For example: Position 0370 contains a centering pin with the position /0120

2 Combinations with standardized parts

Pos.	Sachnummer Product number	Benennung (Description)	Technische Info Technical info	Description (Benennung)	Menge Quantity	Einheit Unit
0630		VERSCHL.SCHR.		SCREW PLUG	1	Stk
	0636.302.067	VERSCHL.SCHR.		SCREW PLUG	1	Stk
	0634.801.249	DICHTRING	A 26 X 31	SEALING RING	1	Stk

The parts list shows the components included in the combination of standardized parts

3 Depiction of position/item number on the figure and in the parts list

01.620 - on the figure 01 relates to the assembly in which the position is included. Due to program-related reasons, it is shown on the figure.

0620 - in the parts list

Pos.	Sachnummer Product number	Benennung (Description)	Technische Info Technical info	Description (Benennung)	Menge Quantity	Einheit Unit
0620	0732.040.736	DRUCKFEDER		COMPRESSION SPRING	1	Stk

4 ✻-Positions

Positions marked with an ✻ are optional i.e. inclusion in the parts list is not mandatory.
The following note is shown on the figure

✻	je nach Stücklistenausführung depending on spec. number suivant la nomenclature secondo la distina base

5 Parts, dotted display

Parts with dotted display on the figure are only used for orientation of other parts

Material number: 4656.073.037

Pos.	Information	Amendment number
	CUSTOMER: KALMAR SCHWEDEN	
	CUSTOMER-IDENT-NO.: 923892.0020	
	1.PERFORMANCE CALC.: 4656.707.210	
	VEHICLE DESIGNATION: DCF 200-250	
	WEIGHT LOADED: 58,000 TO	
	ENGINE: VOLVO TAD761 160KW, TIER 3B	
	ENGINE POWER: 158,8 KW	
	SPEED: 1.400 U/MIN	
	INPUT TORQUE: 1.178 N/M	
	SPEED: 1.200 U/MIN	
	TYRE SIZE: 14.00-24	
	TYRE RADIUS DYN.: 0,638 M	
	AXLE RATIO: 17,520	
	MAX. SPEED: 21,6 KM/H	
	2.PERFORMANCE CALC.: 4656.707.324	
	VEHICLE APPLICATION: DCG 90-180	
	WEIGHT LOADED: 39,10 TO	
	ENGINE: CUMMINS QSB6.7 FR92553	
	ENGINE POWER: 165,3 KW	
	SPEED: 1.800 U/MIN	
	INPUT TORQUE: 945 N/M	
	SPEED: 1.500 U/MIN	
	TIRES: 12.00-20	
	TYRE RADIUS DYN.: 0,530 M	
	AXLE RATIO: 14,400	
	MAX. SPEED: 25,1 KM/H	
	PRODUCT DESCRIPTION: ZF-ERGOPOWER TRANSMISSION	
	TRANSMISSION TYPE: 3 WG 171	
	DROP CENTER DISTANCE: 300 MM	
	VEHICLE: FORK LIFT	
	1. GEAR FORWARD: 5,630	
	2. GEAR FORWARD: 2,396	
	3. GEAR FORWARD: 0,994	

© All rights reserved by ZF Friedrichshafen AG, even in the event of applications for copyright. We hold all rights of disposal, such as the right to copy and disseminate. All rights reserved.

Material number: 4656.073.037

Pos.	Information	Amendment number
	1. GEAR REVERSE: 5,647	
	2. GEAR REVERSE: 2,404	
	3. GEAR REVERSE: 0,997	
	NUMBER OF PULSES ENGIN: 4	
	NUMBER OF PULSES TURB: 51	
	NUMBER OF PULSES MRK: 58	
	NUMBER OF PULSES OUTP.: 62	
	CONVERTER: W 340	
	CONVERTER PART NR.: 034 H 117	
	LOCK-UP CLUTCH: WITHOUT	
	STALL TORQUE RATIO: 1,77	
	TORQUE CONVERTER ABSORPTION 271 NM	
	STATOR FREEWHEEL: WITHOUT	
	ENGINE INPUT: DIRECT MOUNTED TO ENGINE	
	ENGINE: VOLVO	
	ENGINE-CONNECTION: SAE 3 4656 500 078	
	OUTPUT: STANDARD	
	OUTPUT PTO SIDE: WITHOUT PARKING BRAKE	
	OUTPUT FLANGE PTO SIDE: D 150 CT 4 X DIA 12 X 50	
	POWER TAKE OFF: 1 PTO COAXIAL ENGINE-DEPENDENT	
	1.PTO FLANGE: SAE C 2/4 HOLE	
	DRIVER / PROFILE: SAE C 12/24 DP 14 T	
	GEAR CHANGE CONTROL: ZF-ERGOSHIFT/ PROP VALVE	
	VOLTAGE: 24 VOLT	
	SPEED CONTROL: CONNECTION VIA EST	
	OIL LEVEL TUBE: MOUNTED ON PTO SIDE	
	OIL DIPSTICK: LONG/STRAIGHT	
	FILTER INSTALLATION: DIRECT MOUNTED	
	PRES. DROP SWITCH: CLOSING SWITCH	
	EMERGENCY STEERING PUMP: WITHOUT	
	OIL TEMPERATURE SENSOR: WITH (VIA EST)	
	GEARBOX BREATHER: WITH	
	ERGO INCH: WITH	

© All rights reserved by ZF Friedrichshafen AG, even in the event of applications for copyright. We hold all rights of disposal, such as the right to copy and disseminate. All rights reserved.

Material number: 4656.073.037

Pos.	Information	Amendment number
	ELECTRIC PARTS ORDER: SEPARATE ORDER	
	SEPARATE ORDER: EST-37A S. SCD 002000019762	
	CONTROL UNIT: EST 37A	
	GEAR SELECTOR: WITHOUT	
	2ND GEAR SELECTOR: WITHOUT	
	DISPLAY: WITHOUT	
	LOAD SENSOR: WITHOUT	
	WIRING: WITHOUT	
	OIL CAPACITY TRANSM.: CA. 18 LITRE	
	OIL FILLING TRANSM.: WITHOUT	
	OIL GRADE TRANSM.: TE- ML 03	
	PRIMER PAINT: YELLOW RAL 1006	
	DOCUMENTATION GEAR BOX: ----------	
	SECTION DRAWING: 4656 063 012	
	INSTALLATION DRAWING: 4656.673.037	
	GEARBOX DIAGRAM: 4656 700 068	
	OIL CIRCUIT DIAGRAM: 4656 700 075	
	INSTALL. INSTRUCTIONS: 0000 702 951	
	DOCU. CONTROL UNIT: ----------	
	DRAWING 6009.665.002	
	CONNECTION DIAGRAM: S. SOFTWARE CONTROL DOC. (SCD)	

© All rights reserved by ZF Friedrichshafen AG, even in the event of applications for copyright. We hold all rights of disposal, such as the right to copy and disseminate. All rights reserved.

Material number: 4656.073.037

Graphics	Pos.	Material number	Name	Quantity	Amend. no.	Techn. Info.
465613004200	270	4656.130.042	ENGINE CONNECTION	1		
416603408000	500	4166.034.080	CONVERTER	1		
465610200600	30	4656.102.006	INPUT	1		
465610102801	10	4656.101.028	TRANSMISSION HOUSING	1		
465617106300	350	4656.171.063	COUPLING	1		
465617204500	360	4656.172.045	COUPLING	1		
465617305500	370	4656.173.055	COUPLING	1		
465617505500	390	4656.175.055	CLUTCH	1		
465617607100	400	4656.176.071	CLUTCH	1		
465610341700	70	4656.103.417	OUTPUT	1		
465615400800	340	4656.154.008	POWER TAKE-OFF	1		
465610601400	110	4656.106.014	SHIFT SYSTEM	1		
465710640760	115	4657.106.407	SHIFT SYSTEM	1		
465615902361	120	4656.159.023	SHIFT SYSTEM	1		
465612001200	190	4656.120.012	PRESSURE REGULATOR	1		
465712200500	220	4657.122.005	PRESSURE OIL PUMP	1		

© All rights reserved by ZF Friedrichshafen AG, even in the event of applications for copyright. We hold all rights of disposal, such as the right to copy and disseminate. All rights reserved.

Material number: 4656.073.037

Graphics	Pos.	Material number	Name	Quantity	Amend. no.	Techn. Info.
465612501000	240	4656.125.010	INDUCTIVE SENSOR	1		
465613801400	330	4656.138.014	FILTER	1		
465613101100	290	4656.131.011	OIL DIPSTICK	1		

© All rights reserved by ZF Friedrichshafen AG, even in the event of applications for copyright. We hold all rights of disposal, such as the right to copy and disseminate. All rights reserved.
For information only, not subject to the amendment service.

Plant

Material number: 4656.073.037
Plant: 465613004200
Material-assembly-group-no: 4656.130.042

3 WG 171 /
ENGINE CONNECTION

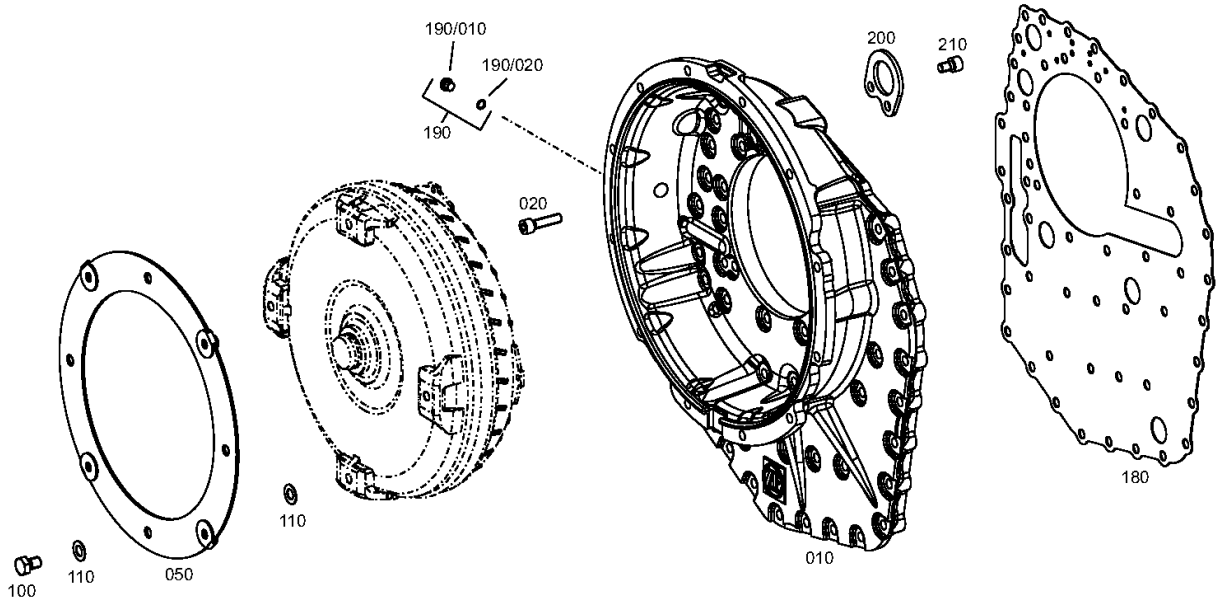

© All rights reserved by ZF Friedrichshafen AG, even in the event of applications for copyright. We hold all rights of disposal, such as the right to copy and disseminate. All rights reserved.

Plant

Material number: 4656.073.037
Plant: 416603408000
Material-assembly-group-no: 4166.034.080

3 WG 171 /
CONVERTER

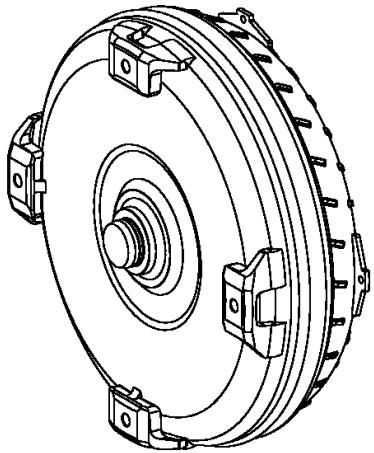

010

© All rights reserved by ZF Friedrichshafen AG, even in the event of applications for copyright. We hold all rights of disposal, such as the right to copy and disseminate. All rights reserved.

Plant

Material number: 4656.073.037
Plant: 465610200600
Material-assembly-group-no: 4656.102.006

3 WG 171 /
INPUT

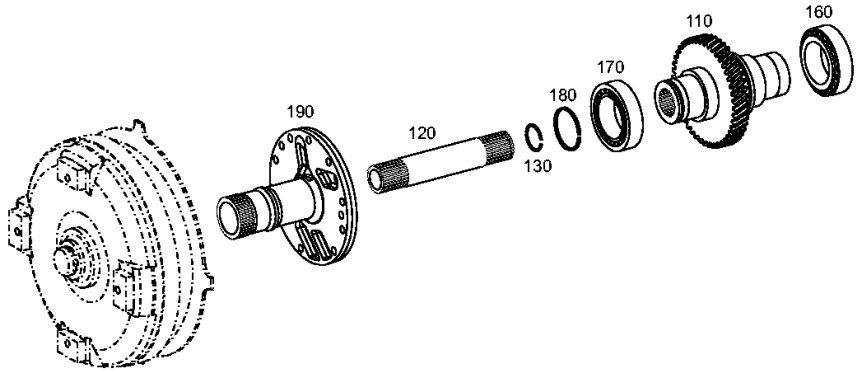

© All rights reserved by ZF Friedrichshafen AG, even in the event of applications for copyright. We hold all rights of disposal, such as the right to copy and disseminate. All rights reserved.

Plant

Material number: 4656.073.037
Plant: 465610102801
Material-assembly-group-no: 4656.101.028

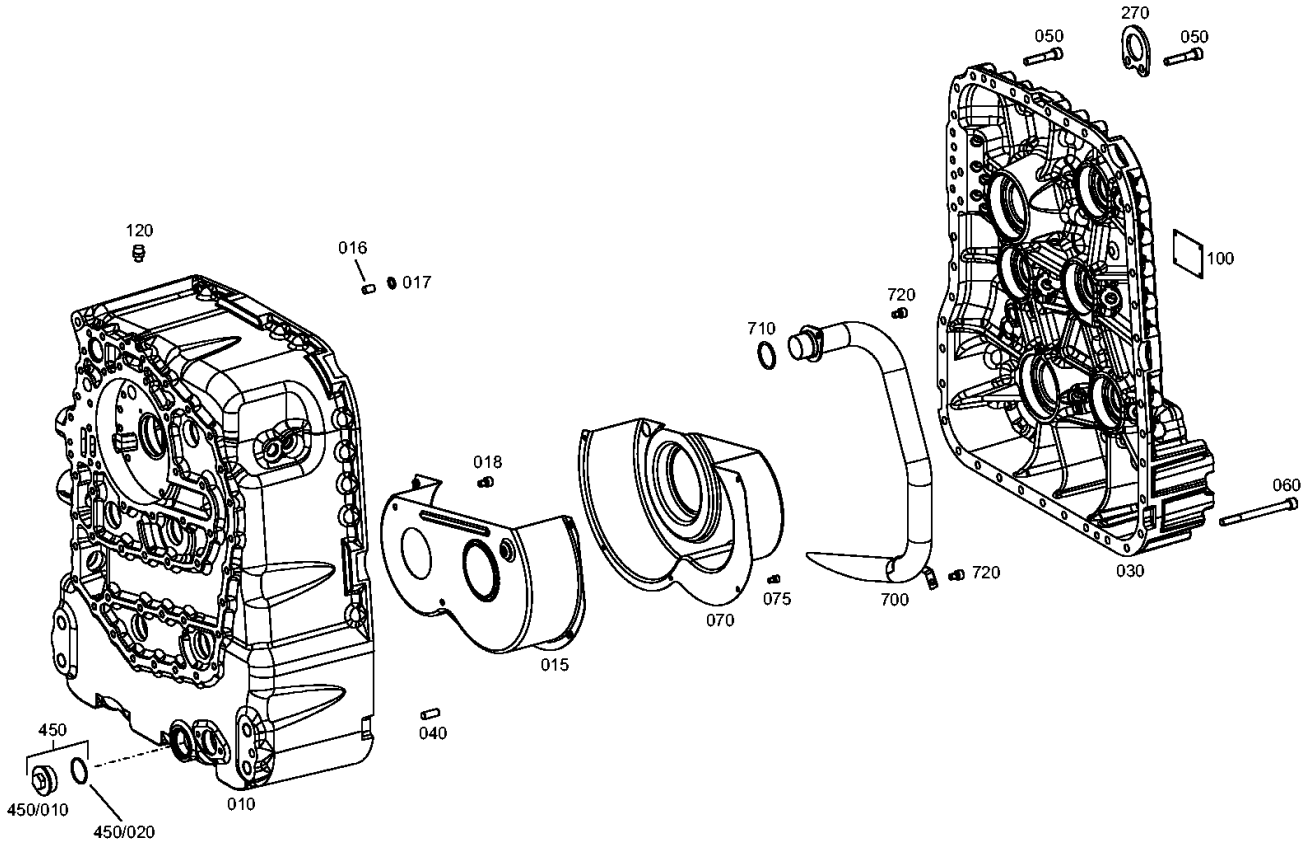

© All rights reserved by ZF Friedrichshafen AG, even in the event of applications for copyright. We hold all rights of disposal, such as the right to copy and disseminate. All rights reserved.

Material number: 4656.073.037
Plant: 465610102802
Material-assembly-group-no: 4656.101.028

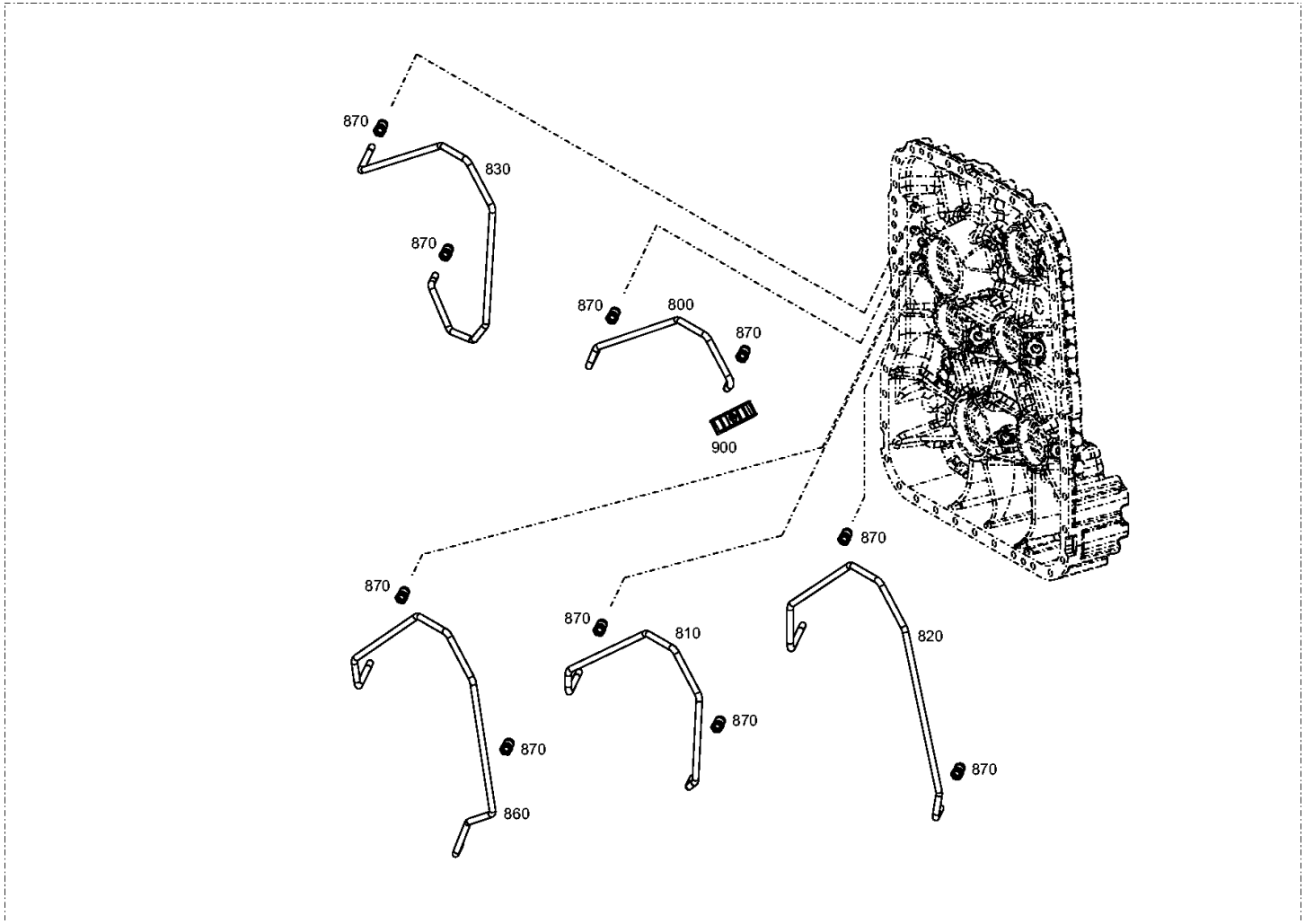

© All rights reserved by ZF Friedrichshafen AG, even in the event of applications for copyright. We hold all rights of disposal, such as the right to copy and disseminate. All rights reserved.

Plant

Material number: 4656.073.037
Plant: 465617106300
Material-assembly-group-no: 4656.171.063

3 WG 171 /
COUPLING

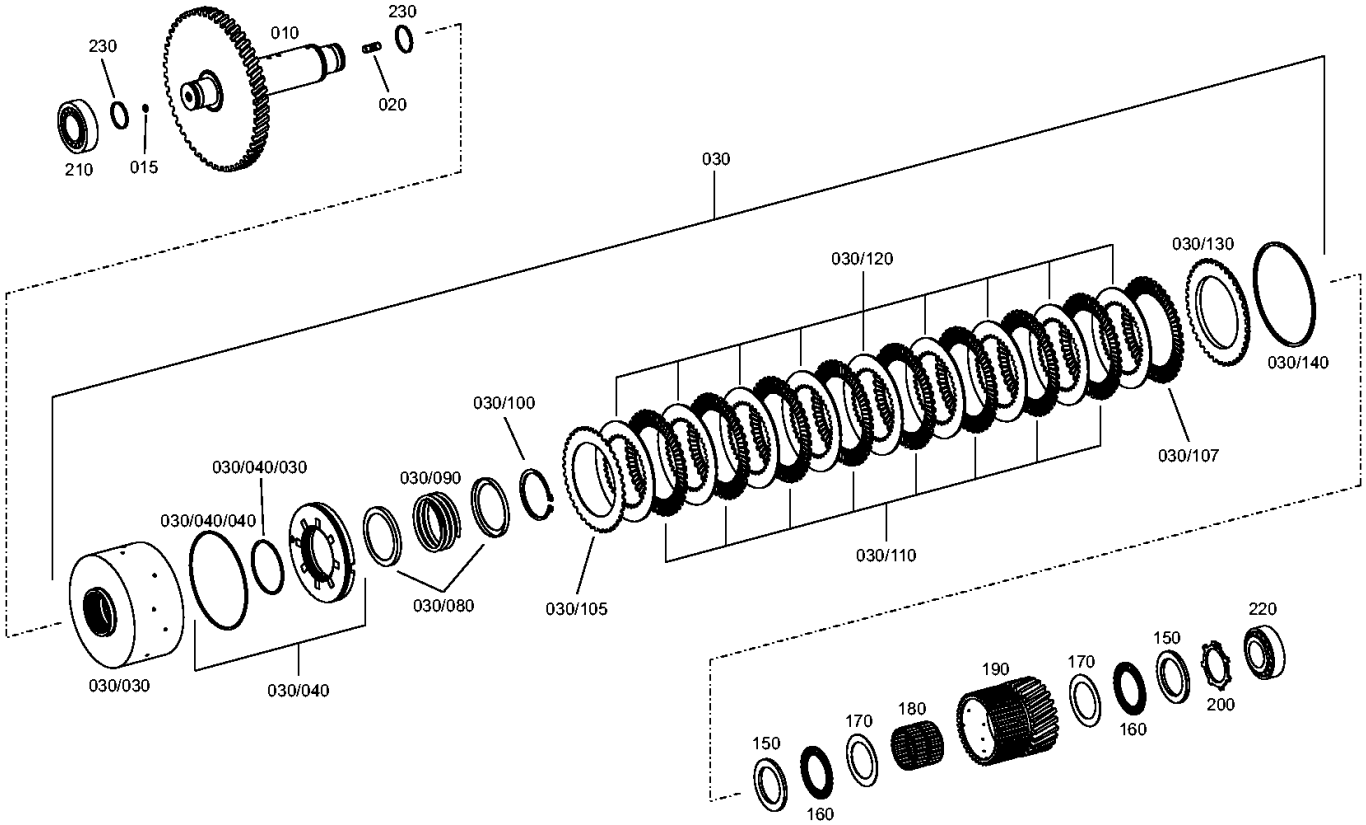

© All rights reserved by ZF Friedrichshafen AG, even in the event of applications for copyright. We hold all rights of disposal, such as the right to copy and disseminate. All rights reserved. 01.09.2020
For information only, not subject to the amendment service.

Plant

Material number: 4656.073.037
Plant: 465617204500
Material-assembly-group-no: 4656.172.045

3 WG 171 /
COUPLING

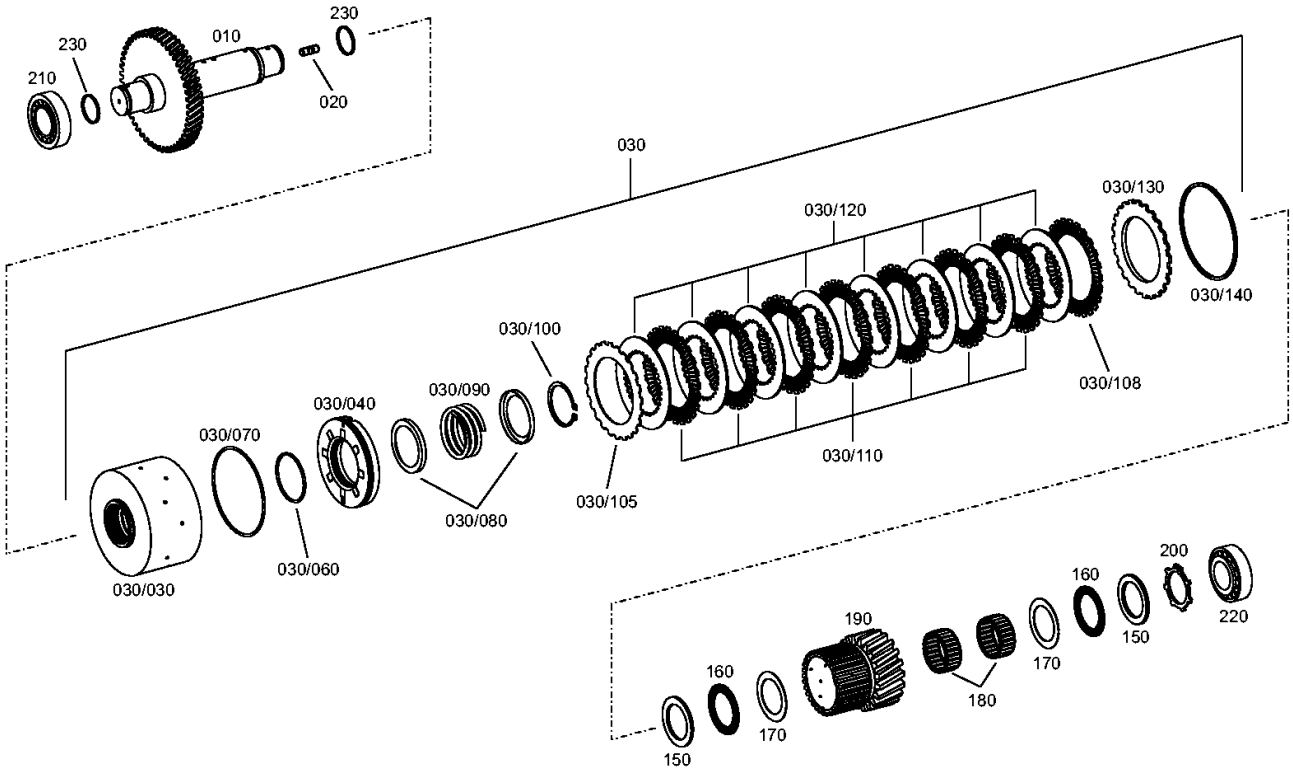

© All rights reserved by ZF Friedrichshafen AG, even in the event of applications for copyright. We hold all rights of disposal, such as the right to copy and disseminate. All rights reserved.

Plant

Material number: 4656.073.037
Plant: 465617305500
Material-assembly-group-no: 4656.173.055

3 WG 171 /
COUPLING

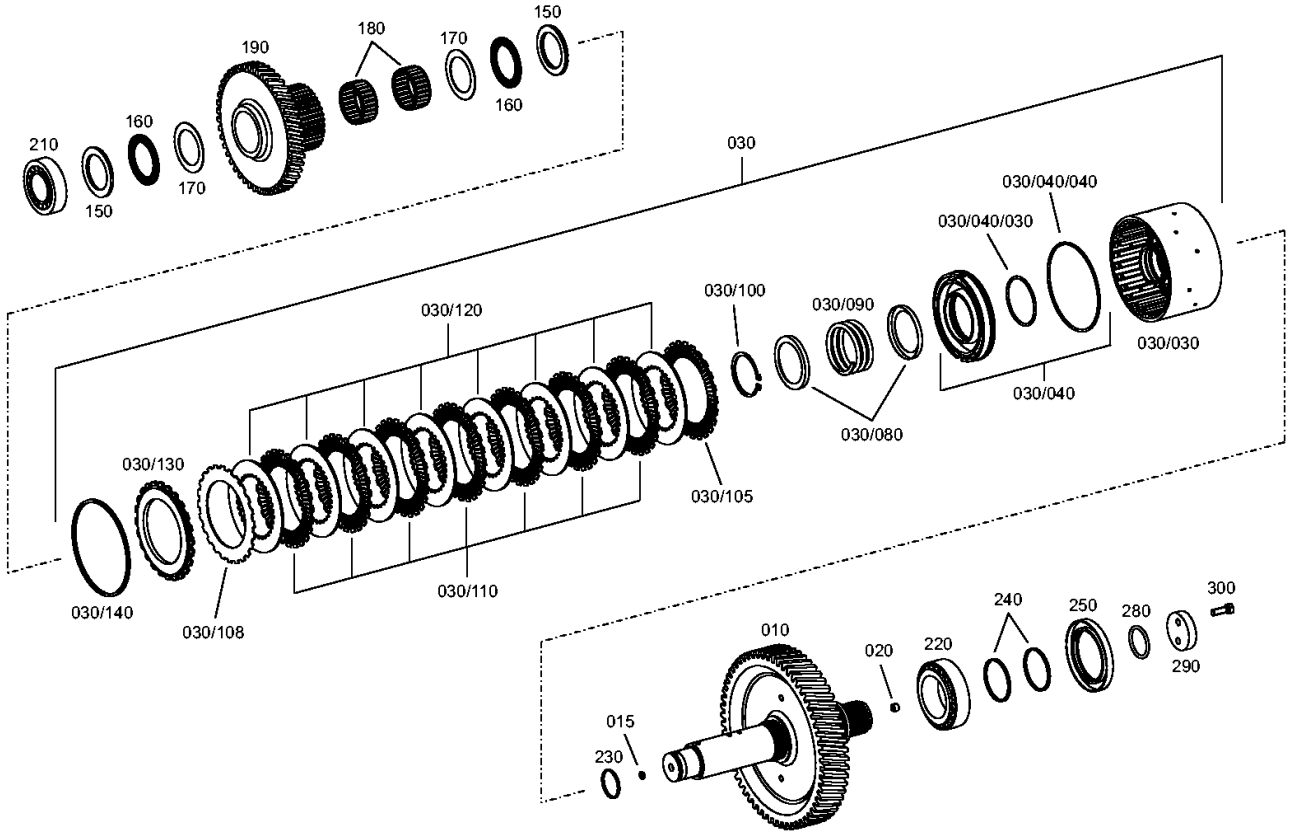

© All rights reserved by ZF Friedrichshafen AG, even in the event of applications for copyright. We hold all rights of disposal, such as the right to copy and disseminate. All rights reserved.

Plant

Material number: 4656.073.037
Plant: 465617505500
Material-assembly-group-no: 4656.175.055

3 WG 171 /
CLUTCH

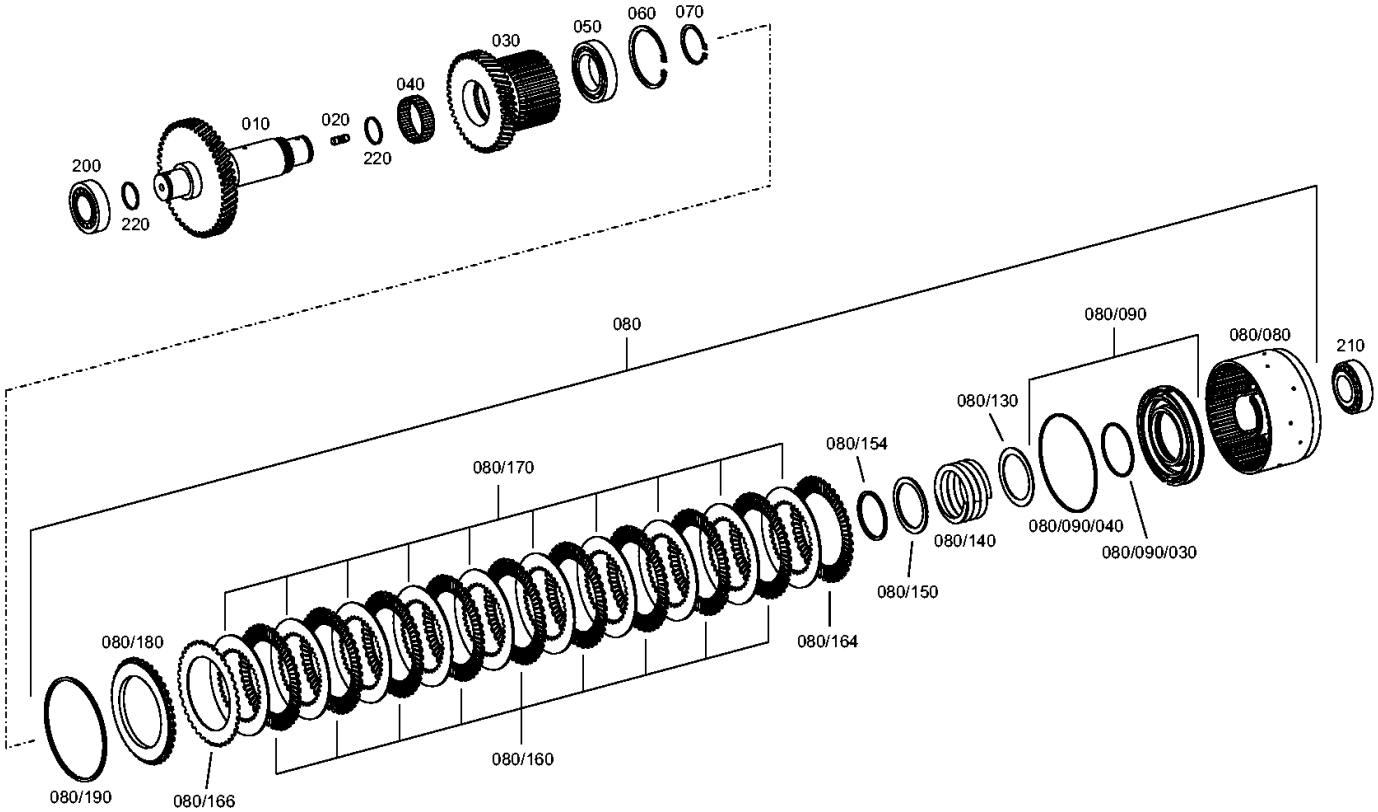

© All rights reserved by ZF Friedrichshafen AG, even in the event of applications for copyright. We hold all rights of disposal, such as the right to copy and disseminate. All rights reserved.

Plant

Material number: 4656.073.037
Plant: 465617607100
Material-assembly-group-no: 4656.176.071

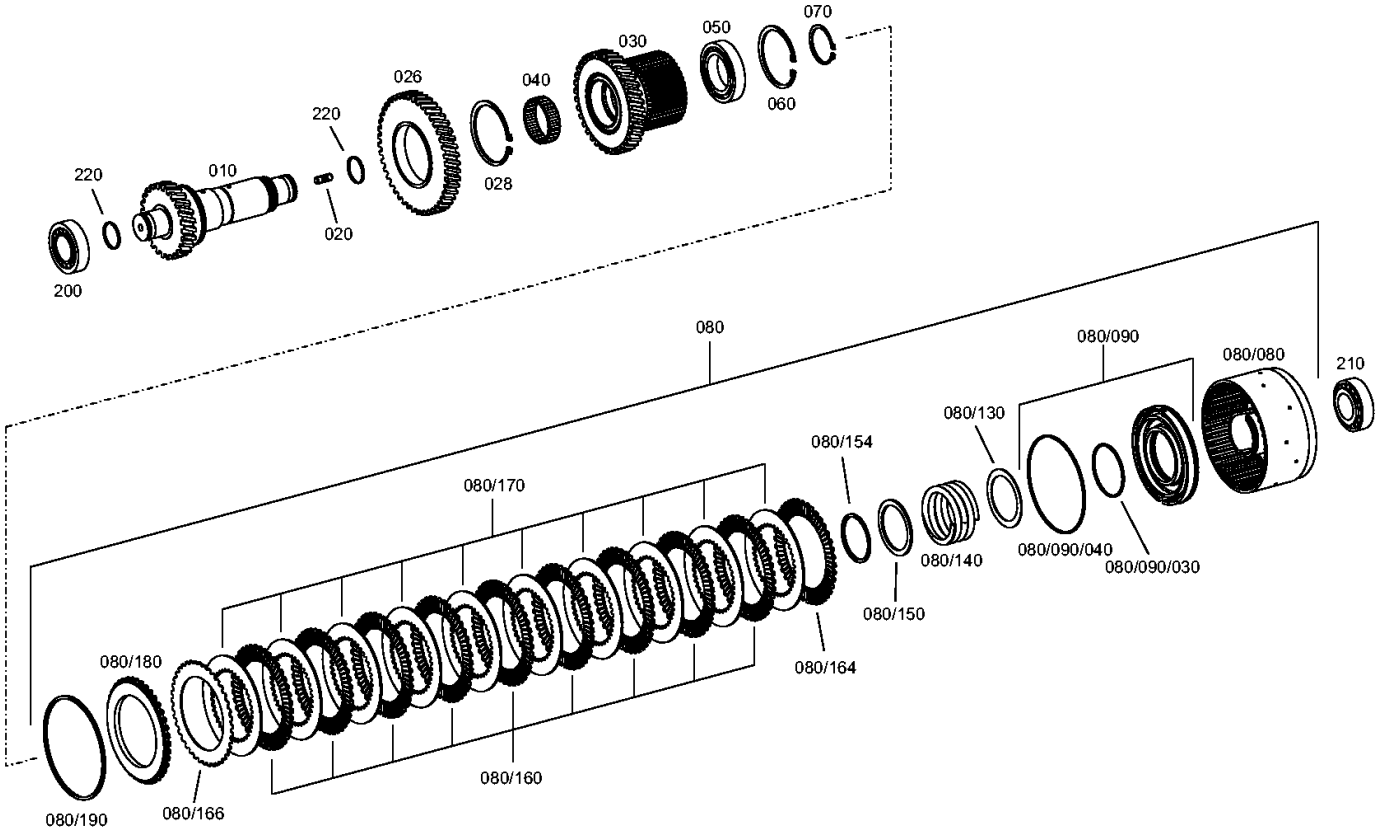

© All rights reserved by ZF Friedrichshafen AG, even in the event of applications for copyright. We hold all rights of disposal, such as the right to copy and disseminate. All rights reserved.

Plant

Material number: 4656.073.037
Plant: 465610341700
Material-assembly-group-no: 4656.103.417

3 WG 171 /
OUTPUT

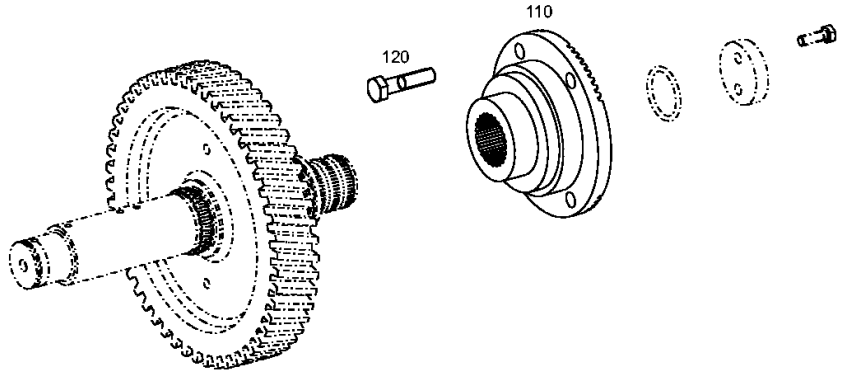

© All rights reserved by ZF Friedrichshafen AG, even in the event of applications for copyright. We hold all rights of disposal, such as the right to copy and disseminate. All rights reserved.

Plant

Material number: 4656.073.037
Plant: 465615400800
Material-assembly-group-no: 4656.154.008

3 WG 171 /
POWER TAKE-OFF

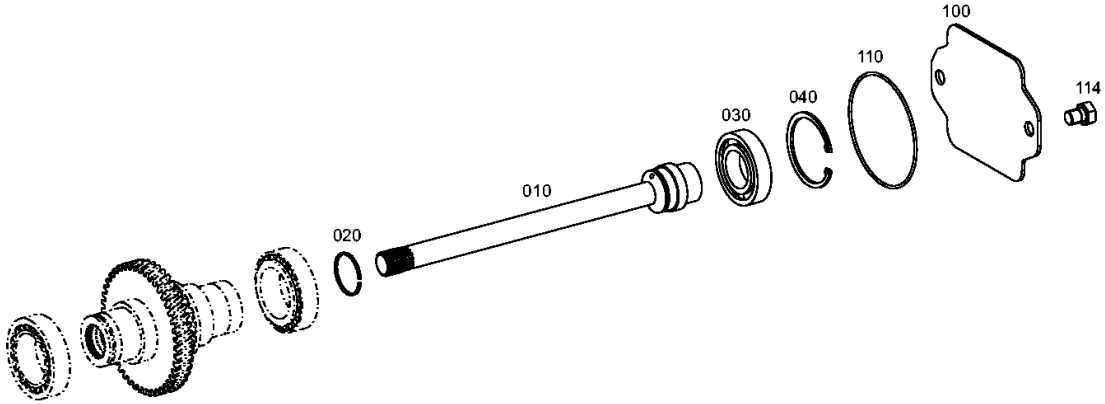

© All rights reserved by ZF Friedrichshafen AG, even in the event of applications for copyright. We hold all rights of disposal, such as the right to copy and disseminate. All rights reserved.

Plant

Material number: 4656.073.037
Plant: 465610601400
Material-assembly-group-no: 4656.106.014

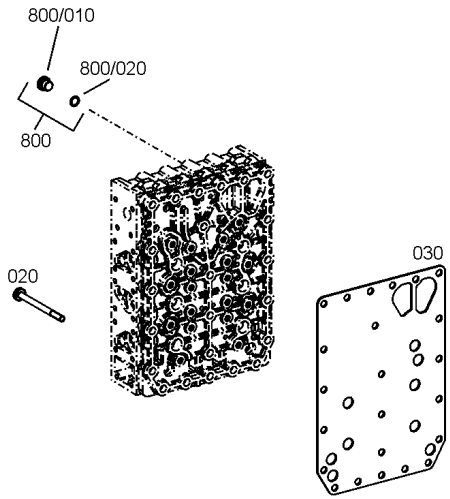

© All rights reserved by ZF Friedrichshafen AG, even in the event of applications for copyright. We hold all rights of disposal, such as the right to copy and disseminate. All rights reserved.

Plant

Material number: 4656.073.037
Plant: 465710640760
Material-assembly-group-no: 4657.106.407

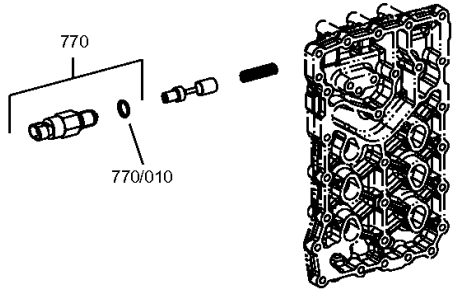

© All rights reserved by ZF Friedrichshafen AG, even in the event of applications for copyright. We hold all rights of disposal, such as the right to copy and disseminate. All rights reserved.

Plant

Material number: 4656.073.037
Plant: 465615902361
Material-assembly-group-no: 4656.159.023

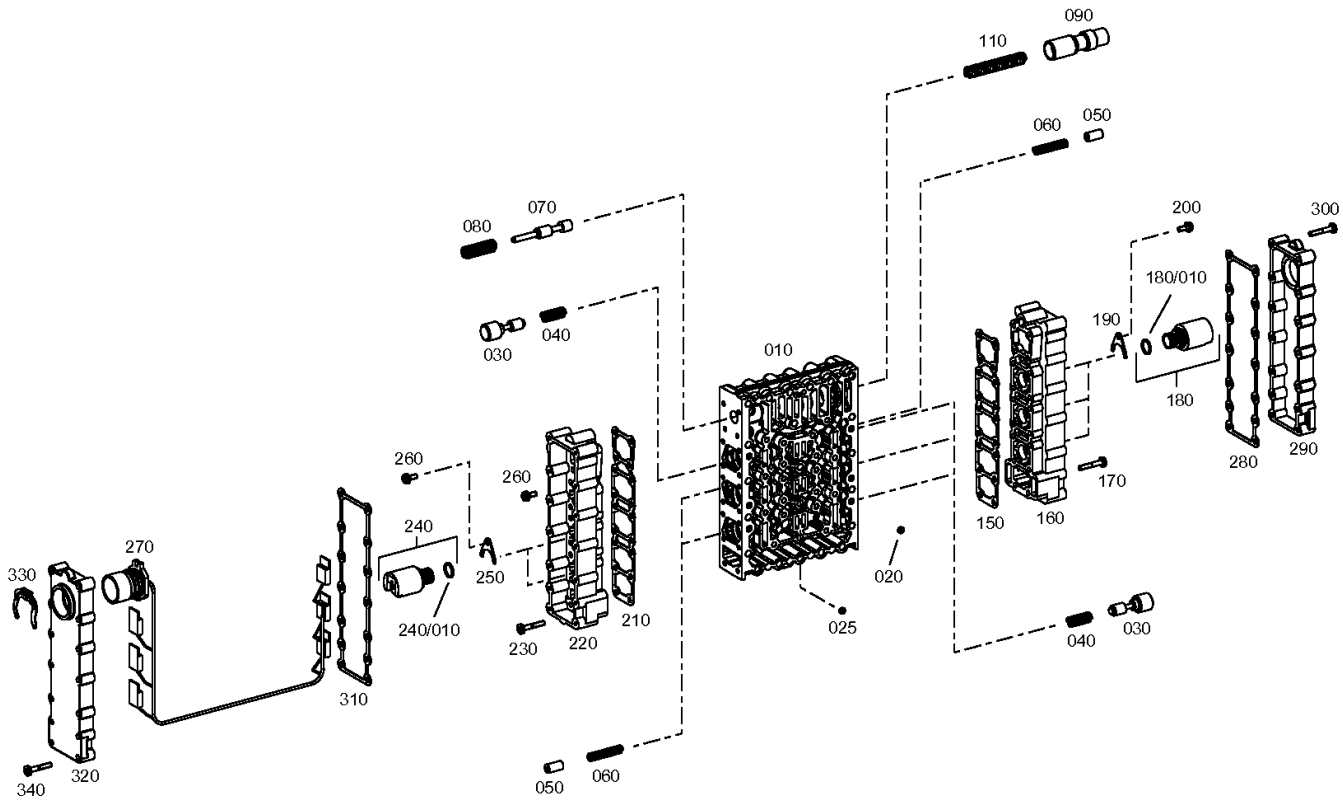

© All rights reserved by ZF Friedrichshafen AG, even in the event of applications for copyright. We hold all rights of disposal, such as the right to copy and disseminate. All rights reserved.

Material number: 4656.073.037
Plant: 465615902362
Material-assembly-group-no: 4656.159.023

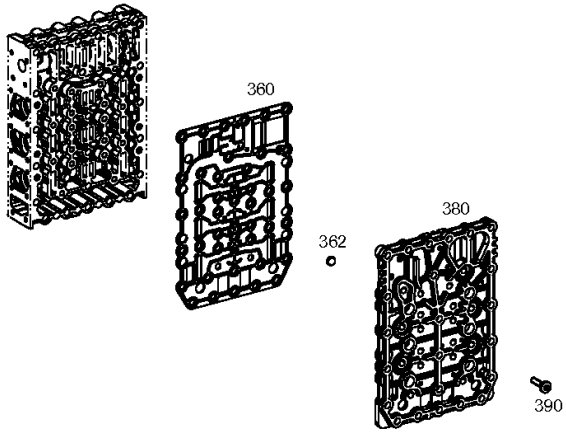

© All rights reserved by ZF Friedrichshafen AG, even in the event of applications for copyright. We hold all rights of disposal, such as the right to copy and disseminate. All rights reserved.

Plant

Material number: 4656.073.037
Plant: 465612001200
Material-assembly-group-no: 4656.120.012

3 WG 171 /
PRESSURE REGULATOR

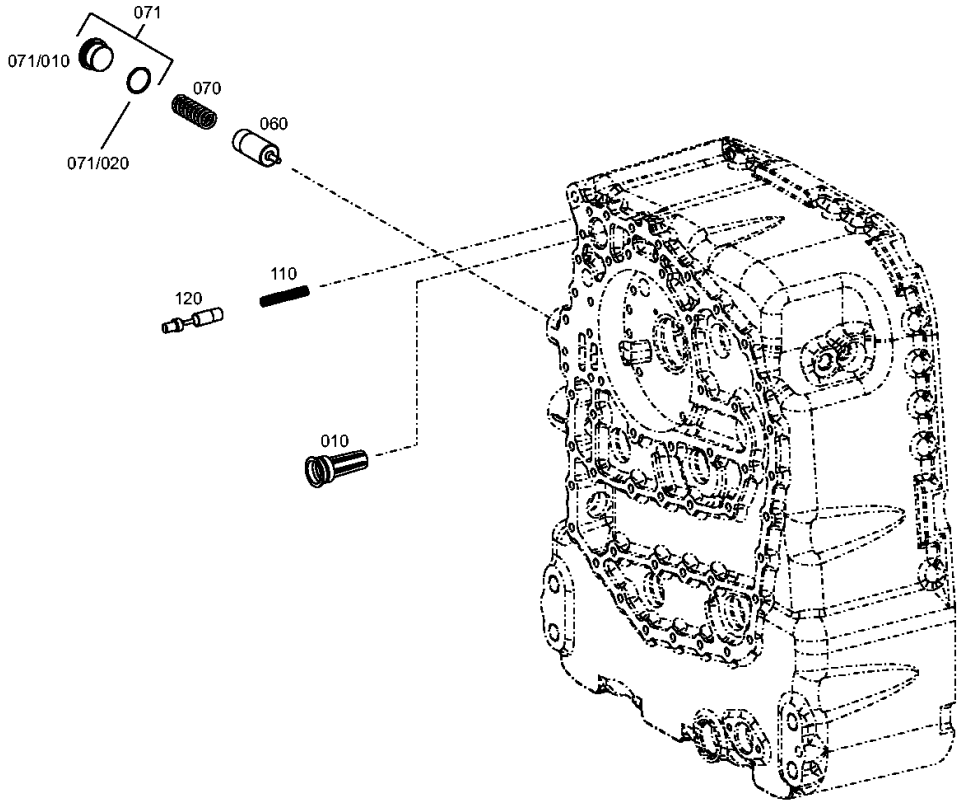

© All rights reserved by ZF Friedrichshafen AG, even in the event of applications for copyright. We hold all rights of disposal, such as the right to copy and disseminate. All rights reserved.

Plant

Material number: 4656.073.037
Plant: 465712200500
Material-assembly-group-no: 4657.122.005

3 WG 171 /
PRESSURE OIL PUMP

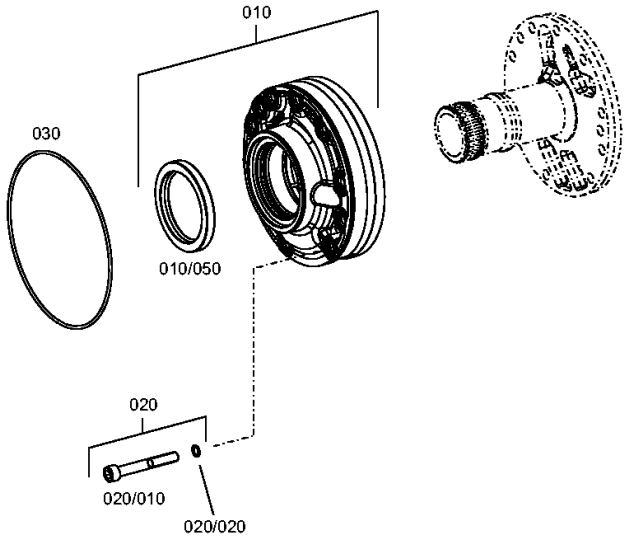

© All rights reserved by ZF Friedrichshafen AG, even in the event of applications for copyright. We hold all rights of disposal, such as the right to copy and disseminate. All rights reserved.

Plant

Material number: 4656.073.037
Plant: 465612501000
Material-assembly-group-no: 4656.125.010

3 WG 171 /
INDUCTIVE SENSOR

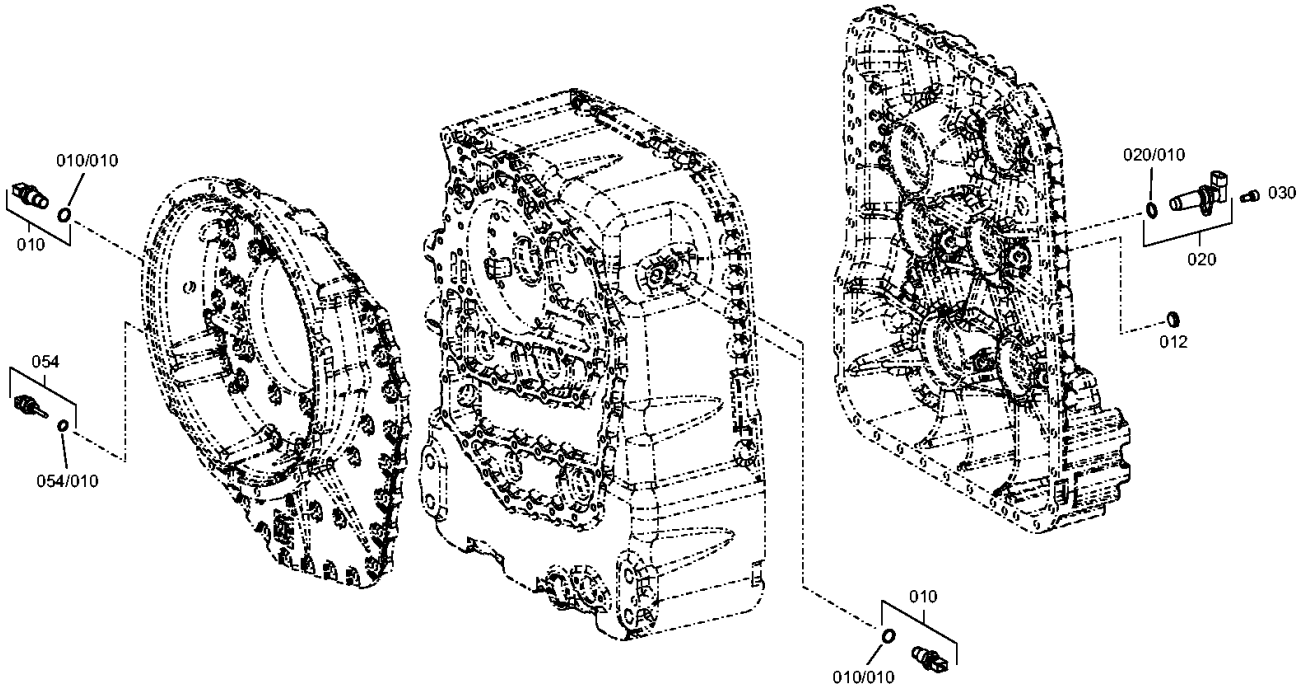

© All rights reserved by ZF Friedrichshafen AG, even in the event of applications for copyright. We hold all rights of disposal, such as the right to copy and disseminate. All rights reserved.
For information only, not subject to the amendment service.

Plant

Material number: 4656.073.037
Plant: 465613801400
Material-assembly-group-no: 4656.138.014

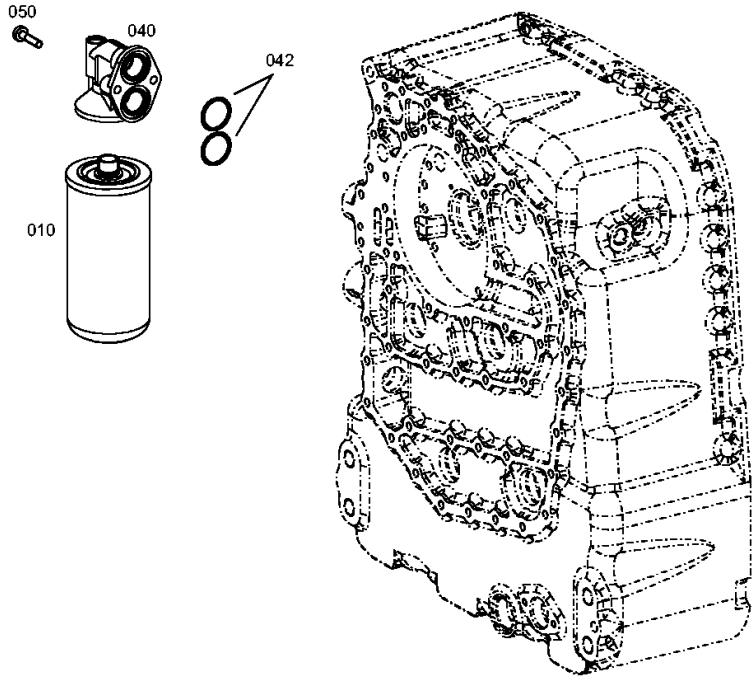

© All rights reserved by ZF Friedrichshafen AG, even in the event of applications for copyright. We hold all rights of disposal, such as the right to copy and disseminate. All rights reserved.

For information only, not subject to the amendment service.

Material number: 4656.073.037
Plant: 465613801450
Material-assembly-group-no: 4656.138.014

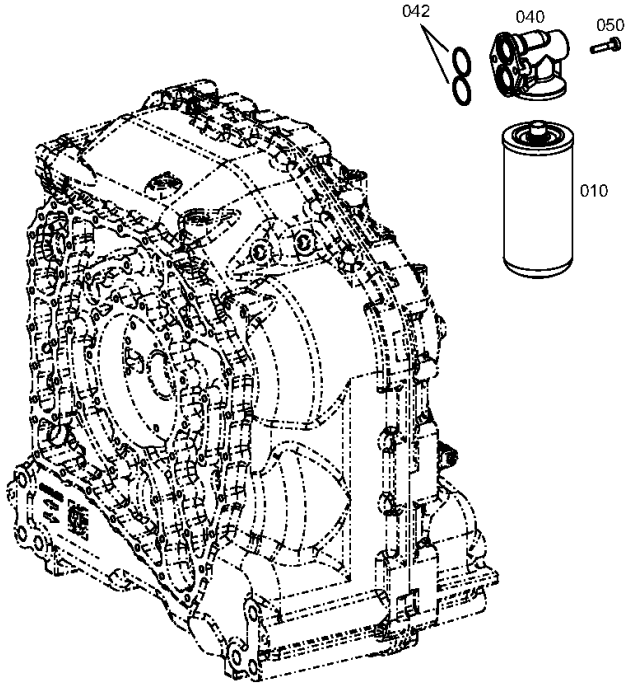

© All rights reserved by ZF Friedrichshafen AG, even in the event of applications for copyright. We hold all rights of disposal, such as the right to copy and disseminate. All rights reserved.

Plant

Material number: 4656.073.037
Plant: 465613101100
Material-assembly-group-no: 4656.131.011

3 WG 171 /
OIL DIPSTICK

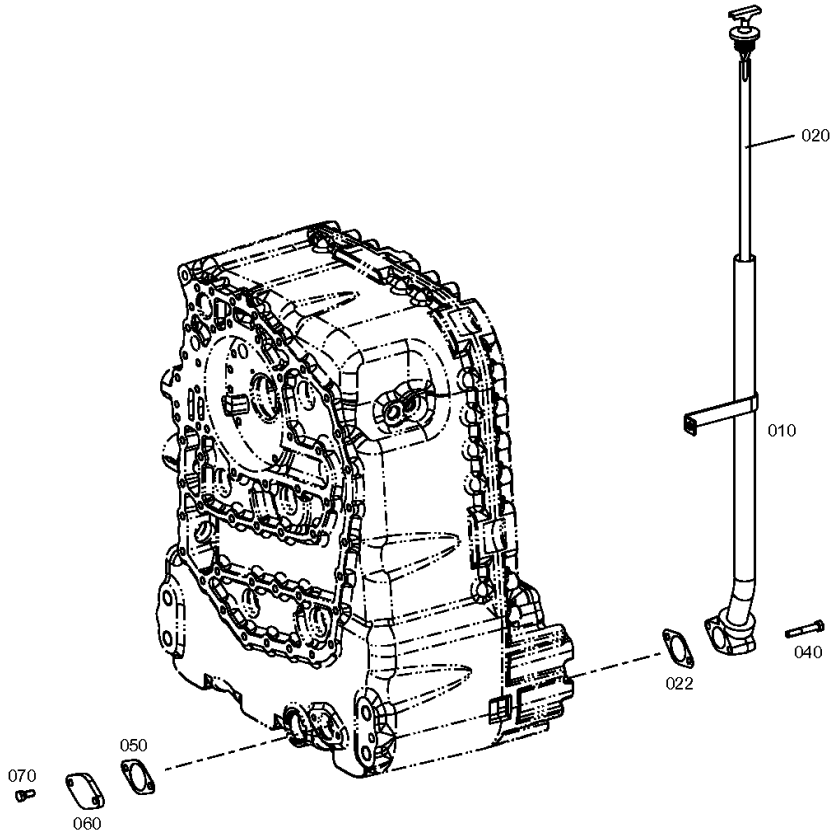

© All rights reserved by ZF Friedrichshafen AG, even in the event of applications for copyright. We hold all rights of disposal, such as the right to copy and disseminate. All rights reserved.